Atlántida
Drinking fountain
Enric Batlle, Joan Roig. 1991

urbidermis
SANTA & COLE

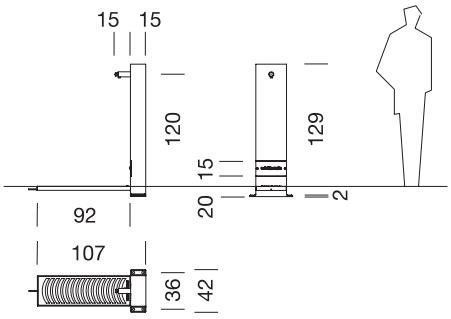

Sizes in cm

CE WRAS

Materials:
Cast iron monolith with anti-rust protection painted. Ductile cast iron grate painted supported by a hotdip galvanised steel frame that is flush with the ground and the same size as the water collection box.
One-inch cast polished brass spout with Presto model push-button.
Pressure regulator and timed flow control included (optionally an anti-ice valve can be incorporated).
Finishes:

Oxiron

Polished

*The colors shown are merely indicative and may differ from reality. (Other colors available to order)
**See special finishes for marine environments
Weight (kg):
122

Installation and maintenance:
Anchored using four bolts, 10 cm below the ground.
For temperatures ≤ 0° C, we recommend turning off the water and draining the circuit to avoid freezing and breackage.
Delivered unassembled and packaged in two parts: monolith with spout and grates with frame according to needs.
Instructions and anchor bolts are included.
No functional maintenance is required, others than standard interior and push-button cleaning.
(For further information log onto urbidermis.com)

Applicable standards:
UNE-EN 13369, UNE-EN13198, UNE EN 771-3, UNE 7178, UNE 146507, EHE 08

The technical information provided by Urbidermis Santa & Cole may be modified at any time without prior notice. We protect intellectual property.
info@urbidermis.com / +34 938 619 100 / urbidermis.com