Lámina Mayor

Antoni Arola. 2018
Pendant Lamp



IP 20

A stroke of light beneath a thin white sheet, in subtle yet effective lightness. As long as it is wide, Lámina Mayor is the most imposing version of this family that celebrates the virtues of reflected light. Ideal for large spaces where light not only illuminates but also shapes and defines the environment.

General description:
White gray metallic shade with glossy finish (exterior).
Black metal structure with matte finish.
Polycarbonate diffuser.
Electric cable length: 5 m / 196.9”

Approximate weight (unpacked):
Lámina Mayor: 12,3 kg / 27.1 lb

Technical information:
Dimmable light source included
Built-in LED

Rated input wattage: 44 W
Operating current: 1400 mA
CCT: 2.700 K
CRI: 90
Lifetime: 40.000 h
Luminous flux: 1.977 lm

Suitable for dimming 1-10V /DALI / PUSH.
Not included external dimmer switch 1-10V / DALI / PUSH.
Suitable only for indoor use.
Non-replaceable light source.

Input voltage: 110 ~ 277 VAC.
(50 Hz / 60 Hz). According to destination.

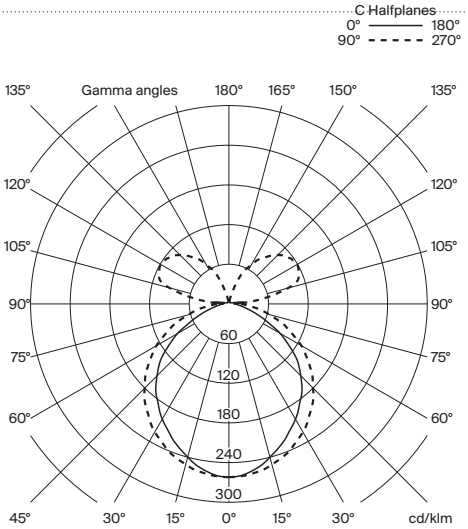

Lámina Mayor

Antoni Arola. 2018
Pendant Lamp

SANTA & COLE

Regulations:
European version
UNE-EN 60598
UNE-EN 55015
UNE-EN 60529

American version
UL-1598
UL-8750
E-336377
Dry location only

Maintenance:
Clean with a smooth cloth. Do not use ammonia, solvents or abrasive cleaning products.

Others:
The lamp is delivered in one package.
The assembly instructions are delivered with the product.

Model / Code: European Version

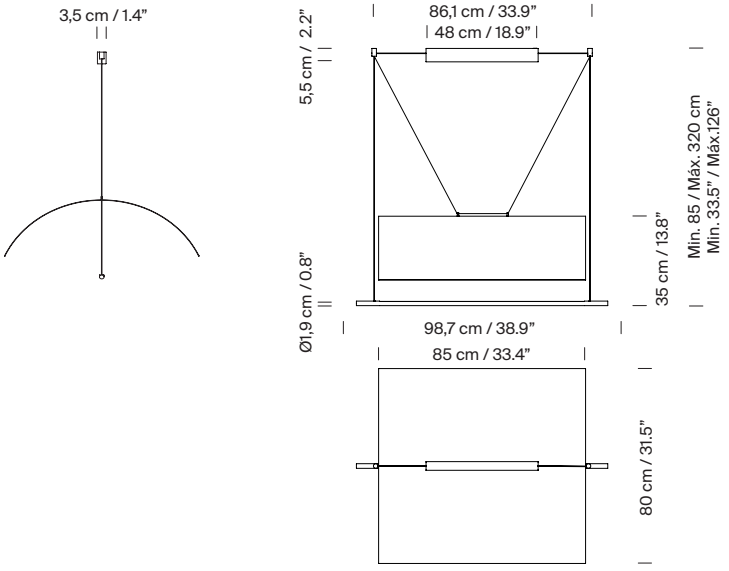

Code
LAMPF01

Model / Code: American Version

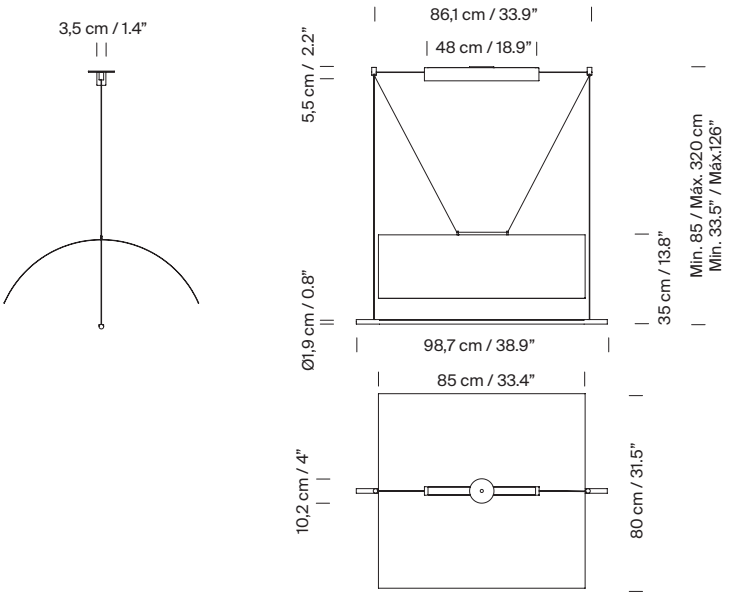

Code
LAMPF01UL

Lámina Mayor

Antoni Arola. 2018
Pendant Lamp

Collection:

Table lamps



Lámina 45

Floor lamps



Lámina 45



Lámina 165

Pendant lamps



Lámina 45 / 85

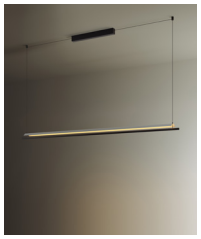

Lámina 165



Lámina Mayor

Wall lamps



Lámina 45



Lámina 165