Lámina 45

Antoni Arola. 2023
Wall Lamp



IP 20

A line of light and a thin aluminum sheet. The elegance of its arch is visible even to the most distracted eyes, soon pleased by the calmness of its reflected light.

The Lámina family was born aloft as a series of pendant lamps, with a lightness that speaks of intelligence. Once brought to the wall—whether vertically or horizontally—it stands out against any background through its play of shadows.

General description:
White grey metallic shade with glossy finish (exterior).
Black metal structure with matte finish.
Polycarbonate diffuser.

Approximate weight (unpacked):
1,8 kg / 4 lb

Technical information:
Dimmable light source included
Built-in LED

Rated input wattage: 11 W
Operating current: 500 mA
CCT: 2.700 K
CRI: 90
Lifetime: 40.000 h
Luminous flux: 375 lm

Suitable for dimming 1-10V / DALI / PUSH.
Not included external dimmer switch 1-10V / DALI / PUSH.
Suitable only for indoor use.
Non-replaceable light source.

Input voltage: 110 ~ 277 Vac.
(50 Hz / 60 Hz). According to destination.

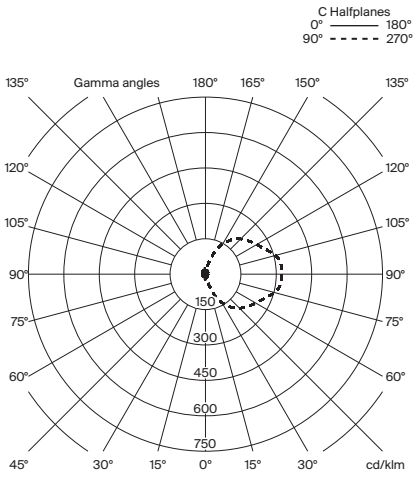

Regulations:
European version
UNE-EN 60598
UNE-EN 55015
UNE-EN 60529

American version
UL-1598
UL-8750
E-336377
Dry location only

Lámina 45

Antoni Arola. 2023
Wall Lamp

SANTA & COLE

Maintenance:
Clean with a smooth cloth. Do not use ammonia, solvents or abrasive cleaning products.

Others:
The lamp is delivered in one package.
The assembly instructions are delivered with the product.

Model / Code: European Version

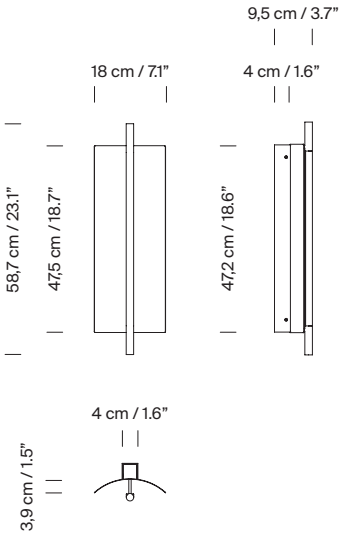

Code
LAMWA01

Model / Code: American Version

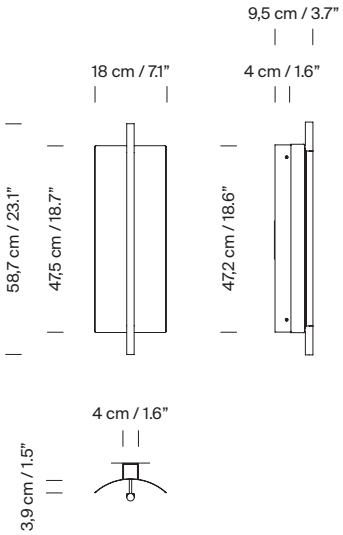

Code
LAMWA01UL

Collection:

Table lamps


Lámina 45

Floor lamps


Lámina 45


Lámina 165

Pendant lamps

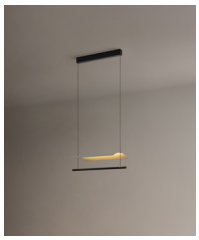
Sistema Lámina 45

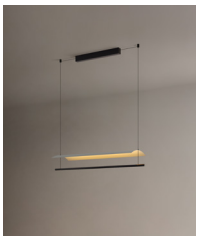
Sistema Lámina 85

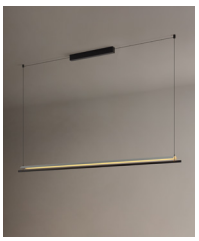
Lámina 165

Wall lamps

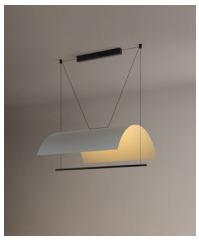
Lámina Mayor


Lámina 45


Lámina 165