Lámina 165

Antoni Arola. 2023
Wall Lamp

SANTA & COLE



IP 20

A line of light and a thin aluminum sheet. The elegance of its arc is visible even to distracted eyes, soon soothed by the calmness of its reflected light. Its concave surface in matte white ensures optimal light quality without glare, while the glossy reverse provides a refined visual effect.

The Lámina family was born aloft as a series of pendant lamps, with a lightness that speaks of intelligence. Lámina 165 is the longest, the narrowest, and without a doubt, the slenderest—a refined silhouette that, when raised as a luminous sculpture, stands out gracefully against any backdrop through its play of shadows.

General description:
White grey metallic shade with glossy finish (exterior).
Black metal structure with matte finish.
Polycarbonate diffuser.

Approximate weight (unpacked):
2,8 Kg / 6.2 lb

Technical information:
Dimmable light source included
Built-In LED

Rated input wattage: 37 W
Operating current: 1.000 mA
CCT: 2.700K
CRI: 90
Lifetime: 40.000 h
Luminous flux: 1.484 lm

Suitable for dimming 1-10V / DALI / PUSH.
Not included external dimmer switch 1-10V / DALI / PUSH.
Suitable only for indoor use.
Non-replaceable light source.

Input voltage: 110 ~ 277 Vac.
(50 Hz / 60 Hz). According to destination.

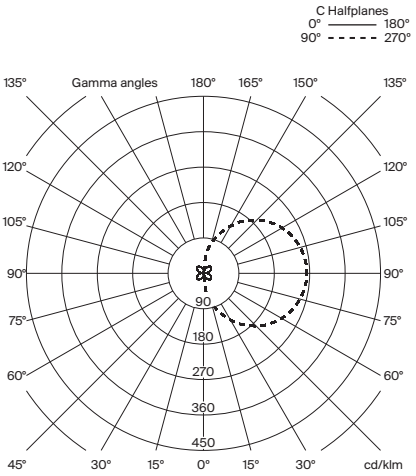

Regulations:
European version
UNE-EN 60598
UNE-EN 55015
UNE-EN 60529

American version
UL-1598
UL-8750
E-336377
Dry location only

Lámina 165

Antoni Arola. 2023
Wall Lamp

SANTA & COLE

Maintenance:
Clean with a smooth cloth. Do not use ammonia, solvents or abrasive cleaning products.

Others:
The lamp is delivered in one package.
The assembly instructions are delivered with the product.

Model / Code: European Version

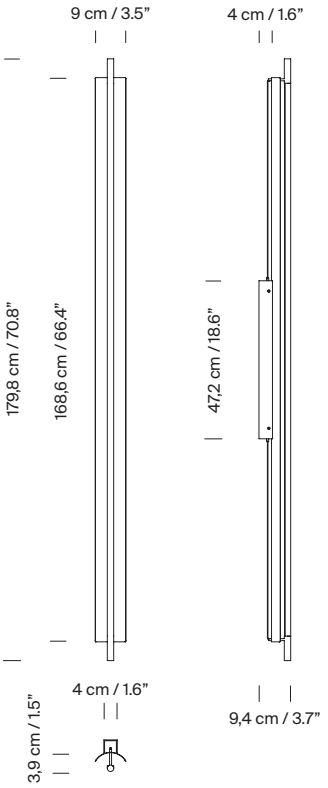

Code
LAMWE01

Model / Code: American Version

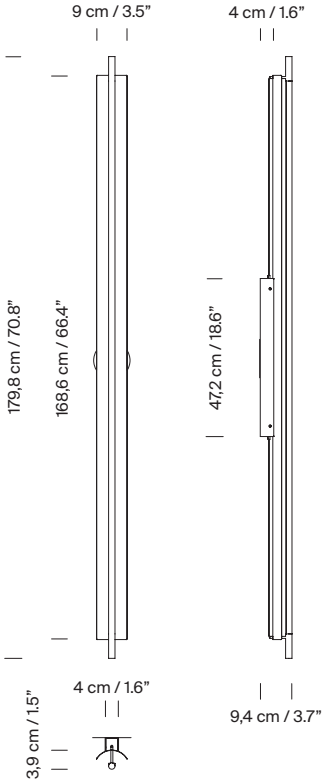

Code
LAMWE01UL

Collection:

Table lamps


Lámina 45

Floor lamps


Lámina 45


Lámina 165

Pendant lamps

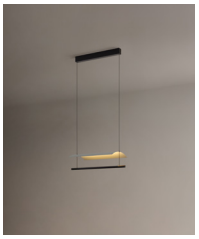
Sistema Lámina 45

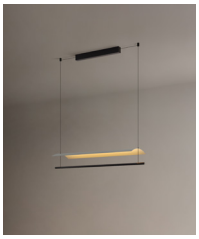
Sistema Lámina 85

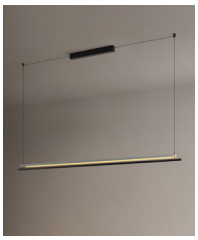
Lámina 165

Wall lamps

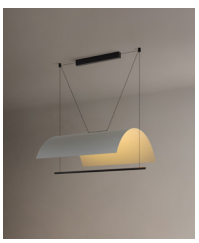
Lámina Mayor


Lámina 45


Lámina 165