Cirio Lineal

Antoni Arola. 2010
Pendant lamps

SANTA & COLE

Lampshades

Canopies

CE IP 20

The ordered repetition of five Cirios. These straight segments are modular and useful for creating long linear compositions or for building the straight sections of the Cirio Oval, allowing you to develop fixtures as large as needed by connecting successive structures.

The Cirio family has four shade options. The handcrafted Sargadelos porcelain, whose translucence bathes the white shade in amber, provides a diffuse and very warm light. In its striped version, it also gains texture and three-dimensionality. For greater luminous efficiency, opal glass offers a more intense and economical alternative. Finally, the opacity of brass allows for focused, directional lighting.

General description:
Capsule with LED module, translucent white diffuser and heat sink with black matte finish.
4 lampshade options: white porcelain, white Pana porcelain, white opal glass and polished brass.
Matte black aluminium structure.
Adjustable matte black metallic canopy with built-in equipment.
S&C LED capsule suitable with HeadLed System lampshades.
Suitable for Junction Box (American version).
Electric cable length: 5 m / 196.8”

Approximate weight (unpacked):
(A) Cirio Lineal 1 module*: 7,5 Kg / 16.5 lb
(B) Cirio Lineal 2 modules*: 12,0 kg / 26.45 lb
(C) Cirio Lineal 3 modules*: 16,5 kg / 36.37 lb

Lampshades:
Porcelain: 0,5 kg / 1.1 lb
Pana porcelain: 0,4 kg / 0.8 lb
Glass: 0,6 kg / 1.3 lb
Brass: 0,3 Kg / 0.7 lb

*Weight with porcelain lampshade

Technical information:
Dimmable light source included
Capsule with LED module

Circular canopy (European version only):
Operating current: 350 mA
CCT: 2.700 K
CRI: 90
Lifetime: 40.000 h

(A) 5 Light sources
Rated input wattage: 23 W
Luminous flux:
Porcelain 615 lm
Pana Porcelain 875 lm
Glass 1.180 lm
Brass 655 lm

(B) 10 Light sources
Rated input wattage: 44,5 W
Luminous flux:
Porcelain 1.230 lm
Pana Porcelain 1.750 lm
Glass 3.620 lm
Brass 1.310 lm

(C) 15 Light sources
Rated input wattage: 66,5 W
Luminous flux:
Porcelain 1.845 lm
Pana Porcelain 2.625 lm
Glass 5.430 lm
Brass 1.965 lm

European version: regulation DALI / DSI / SWITCH DIM.
Not included external dimmer switch.

Suitable only for indoor use.
Always use this light source.

Input voltage: 120 ~ 277 Vac.
(50 Hz / 60 Hz). According to destination

Rectangular canopy:
Operating current: 700 mA
CCT: 2.700 K
CRI: 90
Lifetime: 40.000 h

(A) 5 Light sources
Rated input wattage: 50 W
Luminous flux:
Porcelain 1.110 lm
Pana Porcelain 1.535 lm
Glass 3.280 lm
Brass 1.185 lm

(B) 10 Light sources
Rated input wattage: 92,5 W
Luminous flux:
Porcelain 2.220 lm
Pana Porcelain 3.070 lm
Glass 6.580 lm
Brass 2.370 lm

(C) 15 Light sources
Rated input wattage: 134 W
Luminous flux:
Porcelain 3.330 lm
Pana Porcelain 4.605 lm
Glass 9.840 lm
Brass 3.555 lm

European version regulation 1-10V / DALI.
Not included external dimmer switch.
American version regulation 1-10V.
Not included external dimmer switch.

Suitable only for indoor use.
Always use this light source.

Input voltage: 120 ~ 277 Vac.
(50 Hz / 60 Hz). According to destination

White porcelain lampshade

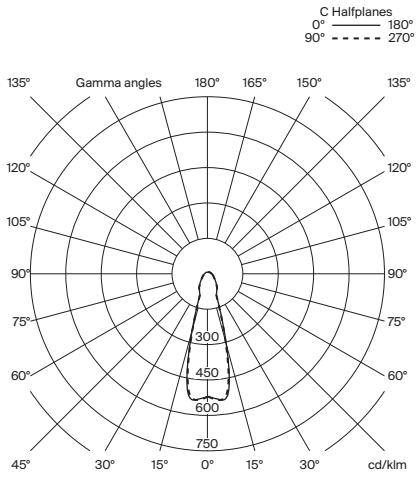

White Pana porcelain lampshade

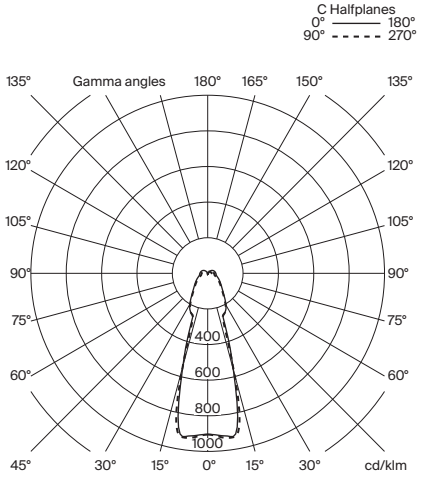

White opal glass lampshade

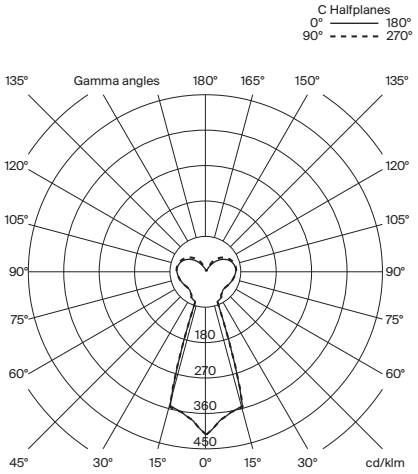

Brass lampshade

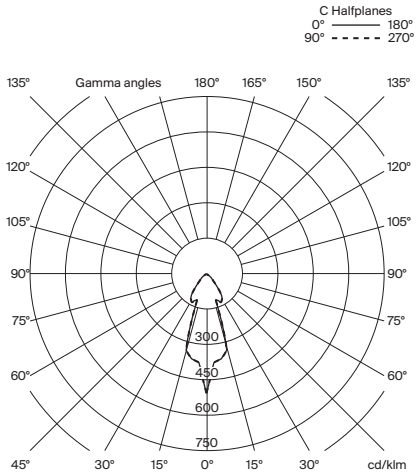

Regulations:
European version
UNE-EN 60598
UNE-EN 55015
UNE-EN 62031
UNE-EN 60529
UNE-EN 61000-3-2

American version
Dry and damp location
UL-1598
UL-8750

Maintenance:
Clean with a smooth cloth. Do not use ammonia, solvents or abrasive cleaning products.

Others:
The lamp is delivered in different packages.
The assembly instructions are delivered with the product.

Model: Lampshades

White porcelain

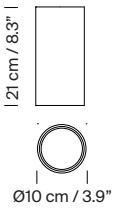

White Pana porcelain

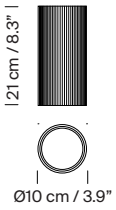

White opal glass

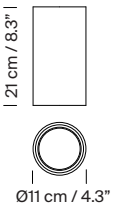

Brass

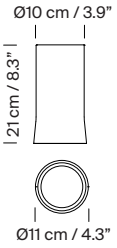

Models / Codes: European Version

Model A: Cirio Lineal 1 module

Circular canopy

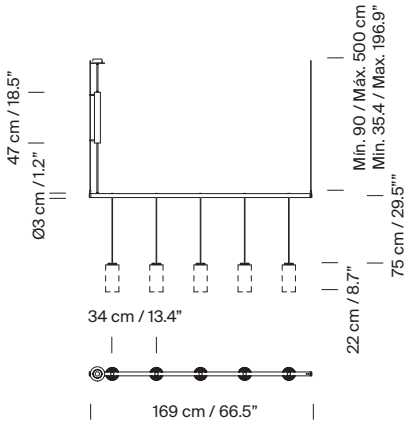

Rectangular canopy

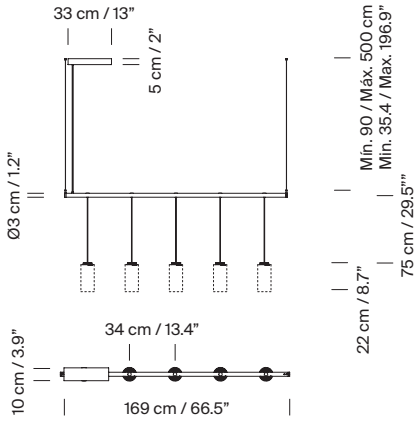

Lampshade	Canopy	Dimming	Code
White porcelain	Circular	DALI / DSI / SWITCH DIM	CILPA01
	Rectangular	1-10V	CILPA02
	Rectangular	DALI	CILPA02D
White Pana porcelain	Circular	DALI / DSI / SWITCH DIM	CILPA07
	Rectangular	1-10V	CILPA08
	Rectangular	DALI	CILPA08D
White opal glass	Circular	DALI / DSI / SWITCH DIM	CILPA03
	Rectangular	1-10V	CILPA04
	Rectangular	DALI	CILPA04D
Brass	Circular	DALI / DSI / SWITCH DIM	CILPA05
	Rectangular	1-10V	CILPA06
	Rectangular	DALI	CILPA06D

Cirio Lineal

Antoni Arola. 2010
Pendant lamps

Models / Codes: European Version

Model B: Cirio Lineal 2 modules

Circular canopy

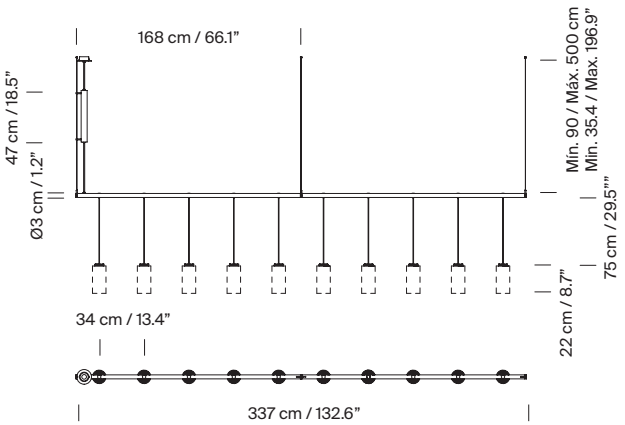

Rectangular canopy

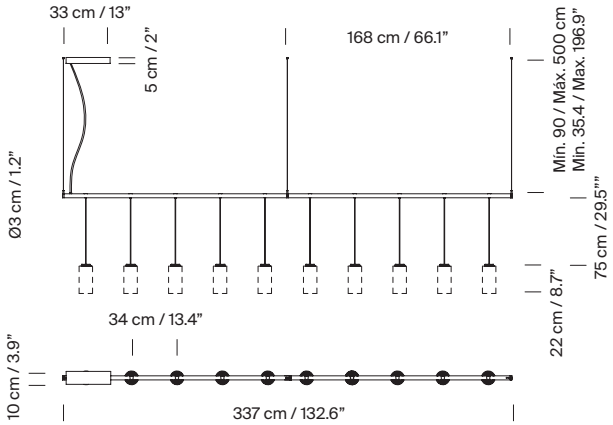

Lampshade	Canopy	Dimming	Code
White porcelain	Circular	DALI / DSI / SWITCH DIM	CILPB01
	Rectangular	1-10V	CILPB02
	Rectangular	DALI	CILPB02D
White Pana porcelain	Circular	DALI / DSI / SWITCH DIM	CILPB07
	Rectangular	1-10V	CILPB08
	Rectangular	DALI	CILPB08D
White opal glass	Circular	DALI / DSI / SWITCH DIM	CILPB03
	Rectangular	1-10V	CILPB04
	Rectangular	DALI	CILPB04D
Brass	Circular	DALI / DSI / SWITCH DIM	CILPB05
	Rectangular	1-10V	CILPB06
	Rectangular	DALI	CILPB06D

Models / Codes: European Version

Model C: Cirio Lineal 3 modules - Contact Santa & Cole team for other configurations.

Circular canopy

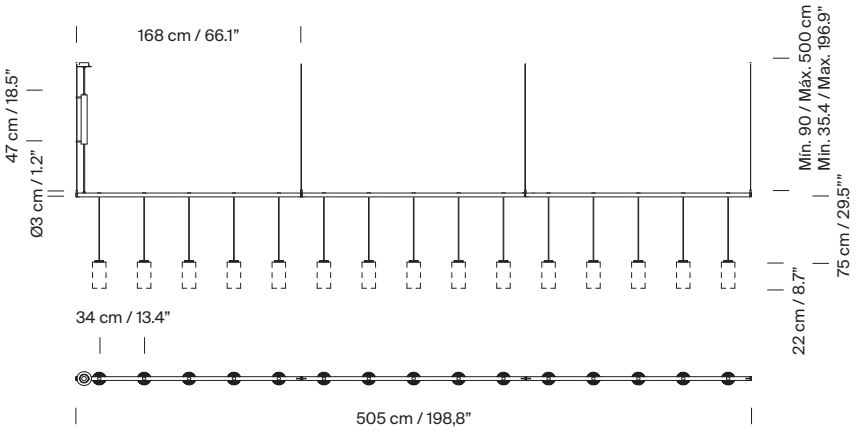

Rectangular canopy

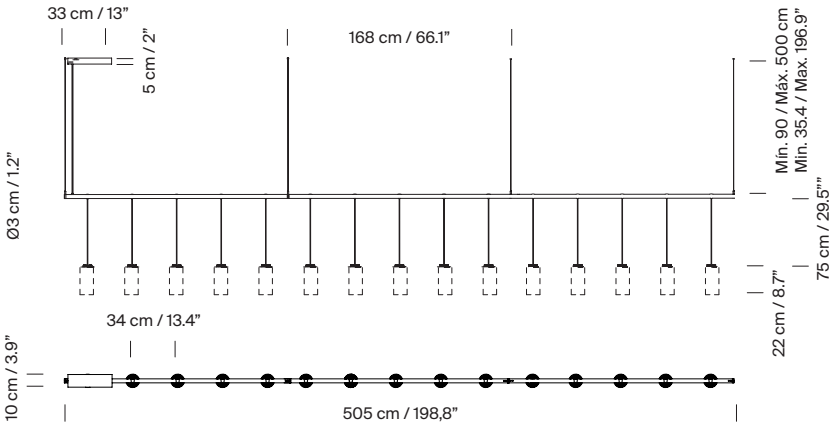

Lampshade	Canopy	Dimming	Code
White porcelain	Circular	DALI / DSI / SWITCH DIM	CILPC01
	Rectangular	1-10V	CILPC02
	Rectangular	DALI	CILPC02D
White Pana porcelain	Circular	DALI / DSI / SWITCH DIM	CILPC07
	Rectangular	1-10V	CILPC08
	Rectangular	DALI	CILPC08D
White opal glass	Circular	DALI / DSI / SWITCH DIM	CILPC03
	Rectangular	1-10V	CILPC04
	Rectangular	DALI	CILPC04D
Brass	Circular	DALI / DSI / SWITCH DIM	CILPC05
	Rectangular	1-10V	CILPC06
	Rectangular	DALI	CILPC06D

Models / Codes: American Version

Model A: Cirio Lineal 1 module - Rectangular canopy

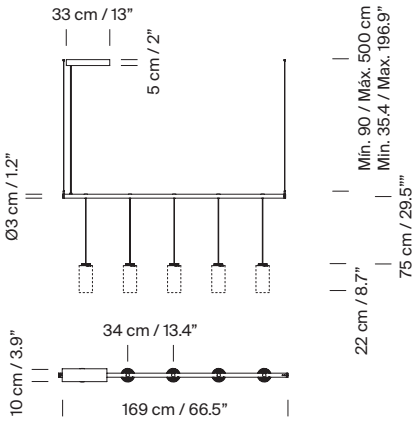

Lampshade	Code
White porcelain	CIRPA02UL
White Pana porcelain	CIRPA08UL
White opal glass	CIRPA04UL
Brass	CIRPA06UL

Model B: Cirio Lineal 2 modules - Rectangular canopy

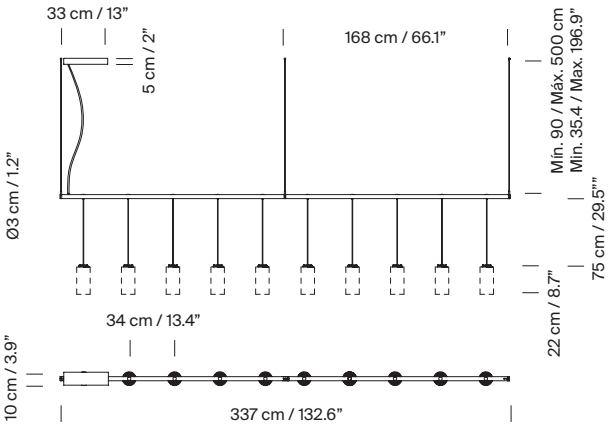

Lampshade	Code
White porcelain	CIRPB02UL
White Pana porcelain	CIRPB08UL
White opal glass	CIRPB04UL
Brass	CIRPB06UL

Model C: Cirio Lineal 3 modules - Rectangular canopy - Contact Santa & Cole team for other configurations

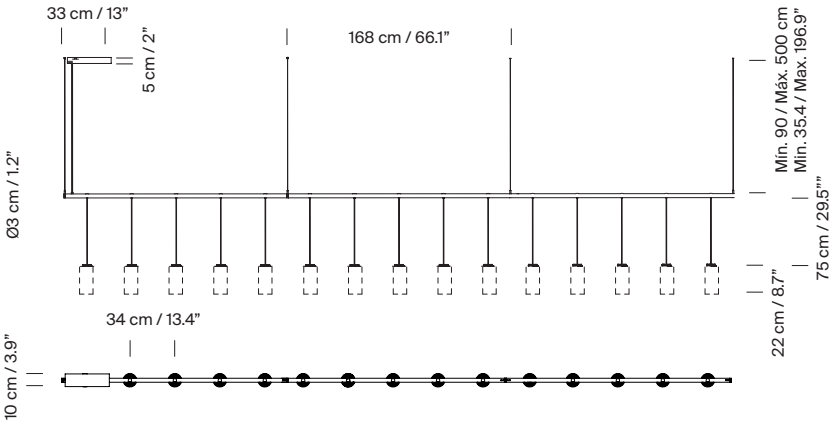

Lampshade	Code
White porcelain	CIRPC02UL
White Pana porcelain	CIRPC08UL
White opal glass	CIRPC04UL
Brass	CIRPC06UL

Collection:
Pendant lamps

Cirio Simple

Cirio Múltiple

Cirio Cascada

Cirio Circular

Cirio Oval

Cirio Chandelier

Wall lamps

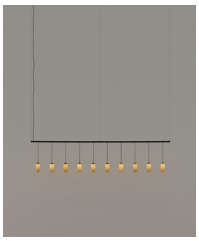
Cirio Lineal

Cirio Cuadrada

Cirio Pana

Cirio