Cirio Chandelier

Antoni Arola. 2015
Pendant lamps

SANTA & COLE

Chandelier XS

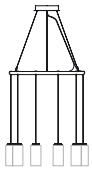

A

Chandelier S

B

Chandelier M

C

Chandelier L

D

Lampshades

Canopies

CE IP 20

Cirio Chandelier concentrates a large amount of light into a vertical column that stands out against its surrounding space. Its compact sequence of concentric rings, increasing in diameter outward, can suspend twenty, thirty, or even forty points of light, collectively radiating a warm and striking luminous flow with strong visual impact.

Common in palaces, theaters, and grand halls, chandeliers have historically been symbols of prestige, often with a theatrical touch. The opulence of traditional chandeliers came from the abundance of reflective materials like crystal and gilded metal, as well as their structural complexity. In this reinterpretation, the visual richness no longer derives from ostentatious materials but from the accumulation of modules, which, when arranged at varying heights and densities, create a composition full of nuance and depth.

The Cirio family has four shade options. The handcrafted Sargadelos porcelain, whose translucence bathes the white shade in amber, provides a diffuse and very warm light. In its striped version, it also gains texture and three-dimensionality. For greater luminous efficiency, opal glass offers a more intense and economical alternative. Finally, the opacity of brass allows for focused, directional lighting.

General description:
Capsule with LED module, translucent white diffuser and heat sink with black matte finish.
4 lampshade options: white porcelain, white Pana porcelain, white opal glass and polished brass.
Matte black aluminum circular structure:
(A) ø 70 cm / 27.6” for 10 lampshades
(B) ø 100 cm / 39.4” for 20 lampshades
(C) ø 130 cm / 51.2” for 30 lampshades
(D) ø 160 cm / 63” for 40 lampshades
Adjustable black metallic circular canopy + equipment.
2 hanging system options: direct cable to ceiling plate or direct cable to ceiling.
Suitable for Junction Box (American version).
Electric cable length: 5 m / 196.8”

Approximate weight (unpacked):
(A) Chandelier XS*: 10 Kg / 22 lb
(B) Chandelier S*: 20 Kg / 44 lb
(C) Chandelier M*: 30 Kg / 66 lb
(D) Chandelier L*: 40 Kg / 88 lb

Lampshades:
Porcelain: 0,5 kg / 1.1 lb
Pana porcelain: 0,4 kg / 0.8 lb
Glass: 0,6 kg / 1.3 lb
Brass: 0,3 Kg / 0.7 lb

*Weight with porcelain lampshade

The technical information provided by Santa & Cole may be modified at any time without prior notice. We protect intellectual property.

Technical information:
Dimmable light source included
Capsule with LED module

Operating current: 530 mA
CCT: 2.700 K
CRI: 90
Lifetime: 40.000 h

(A)
Rated input wattage: 67 W
Luminous flux:
Porcelain 1.640 lm
Pana porcelain 2.400 lm
Glass 5.590 lm
Brass 1.760 lm

(B)
Rated input wattage: 133 W
Luminous flux:
Porcelain 3.280 lm
Pana porcelain 4.800 lm
Glass 11.180 lm
Brass 3.520 lm

(C)
Rated input wattage: 201 W
Luminous flux:
Porcelain 4.920 lm
Pana porcelain 7.200 lm
Glass 16.770 lm
Brass 5.280 lm

(D)
Rated input wattage: 266 W
Luminous flux:
Porcelain 6.560 lm
Pana porcelain 9.600 lm
Glass 22.360 lm
Brass 7.040 lm

European version: suitable for dimming 1-10V / DALI. Not included external dimmer switch 1-10V / DALI.
American version: suitable for dimming 1-10V. Not included external dimmer switch 1-10V.

Suitable only for indoor use.
Always use this light source.

Input voltage: 120 ~ 277 Vac.
(50 Hz / 60 Hz). Acording to destination.

White porcelain lampshade

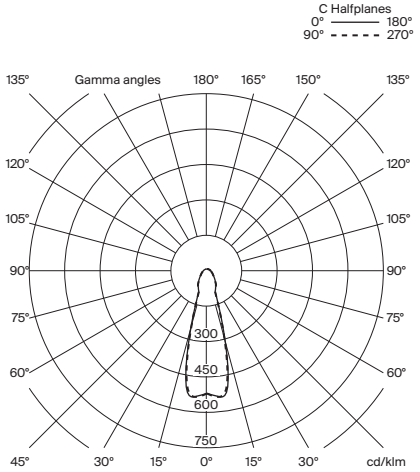

White Pana porcelain lampshade

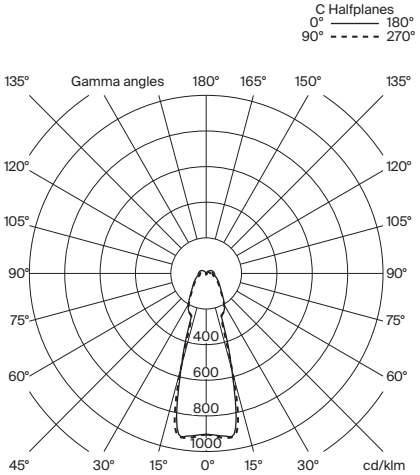

White opal glass lampshade

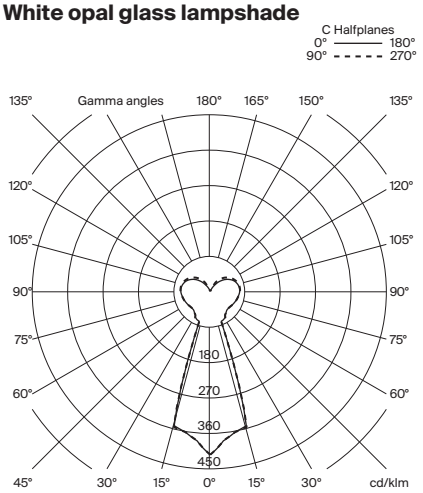

Brass lampshade

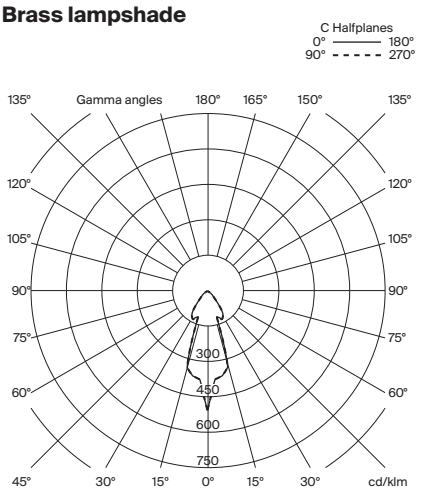

Regulations:
European version
UNE-EN 60598
UNE-EN 55015
UNE-EN 62031
UNE-EN 61000-3-2
UNE-EN 60529
UNE-EN 61347-2-13

American version
Dry and damp location
UL-1598
UL-8750
E-336377

Maintenance:
Clean with a smooth cloth. Do not use ammonia, solvents or abrasive cleaning products.

Others:
The lamp is delivered in different packages.
The assembly instructions are delivered with the product.

Model: Lampshades

White porcelain

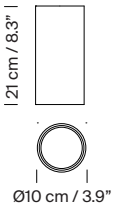

White Pana porcelain

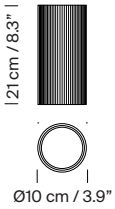

White opal glass

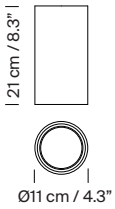

Brass

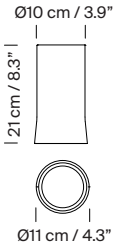

Model A: Cirio Chandelier XS

Direct cable to canopy

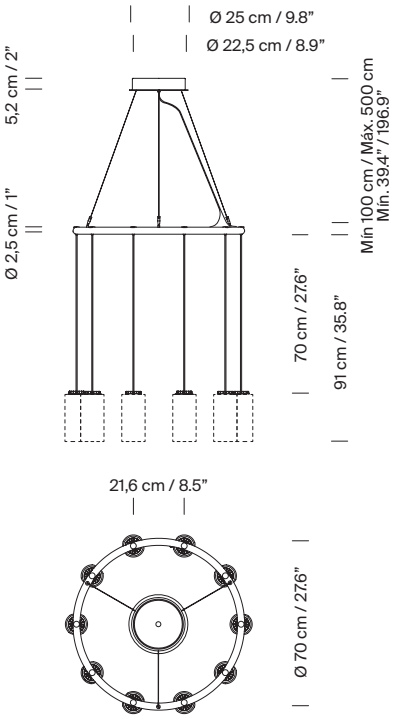

Direct cable to ceiling

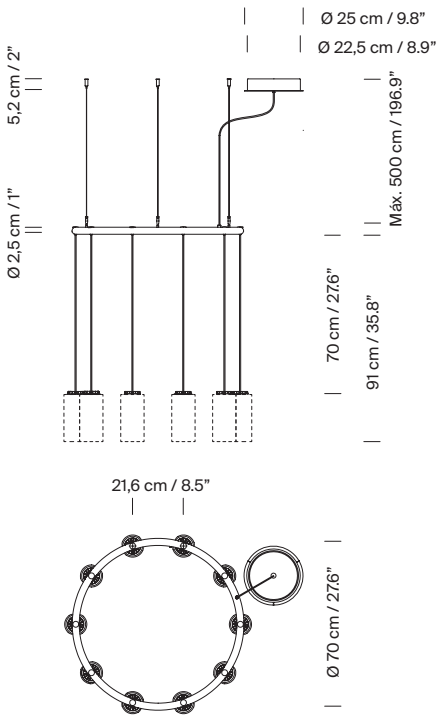

Codes / European Version

Lampshade	Dimming	Code
White porcelain	1-10V	CIHPD01
	DALI	CIHPD01D
White Pana porcelain	1-10V	CIHPD04
	DALI	CIHPD04D
Vidrio blanco opal	1-10V	CIHPD02
	DALI	CIHPD02D
Brass	1-10V	CIHPD03
	DALI	CIHPD03D

Codes / American Version

Lampshade	Dimming	Code
White porcelain	1-10V	CIHPD01UL
White Pana porcelain	1-10V	CIHPD04UL
White opal glass	1-10V	CIHPD02UL
Brass	1-10V	CIHPD03UL

Model B: Cirio Chandelier S

Direct cable to canopy

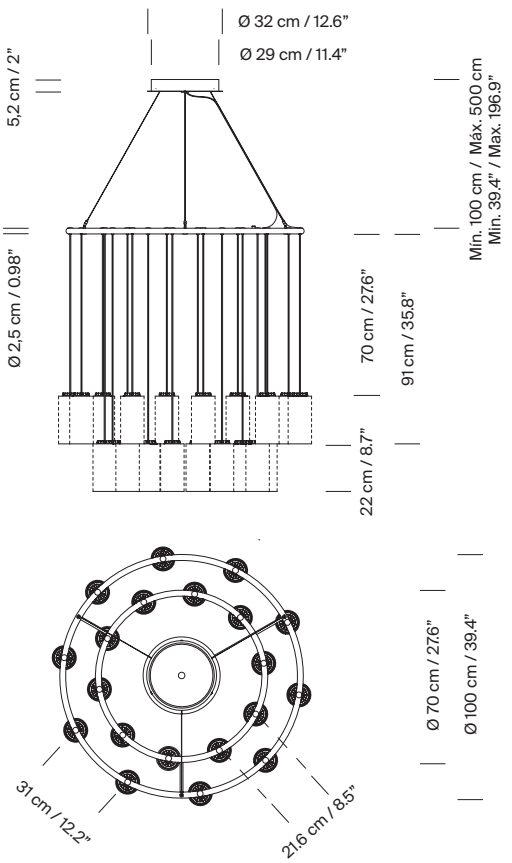

Direct cable to ceiling

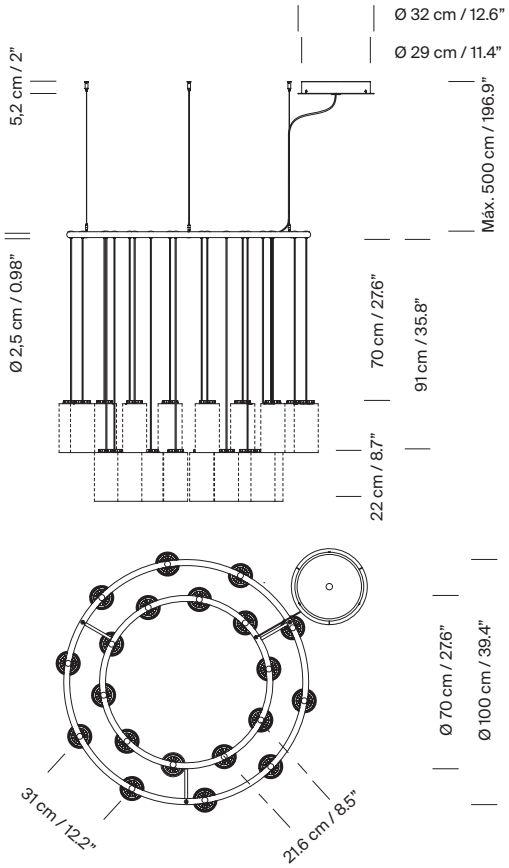

Codes / European Version

Lampshade	Dimming	Code
White porcelain	1-10V	CIHPA01
	DALI	CIHPA01D
White Pana porcelain	1-10V	CIHPA04
	DALI	CIHPA04D
Vidrio blanco opal	1-10V	CIHPA02
	DALI	CIHPA02D
Brass	1-10V	CIHPA03
	DALI	CIHPA03D

Codes / American Version

Lampshade	Dimming	Code
White porcelain	1-10V	CIHPA01UL
White Pana porcelain	1-10V	CIHPA04UL
White opal glass	1-10V	CIHPA02UL
Brass	1-10V	CIHPA03UL

Model C: Cirio Chandelier M

Direct cable to canopy

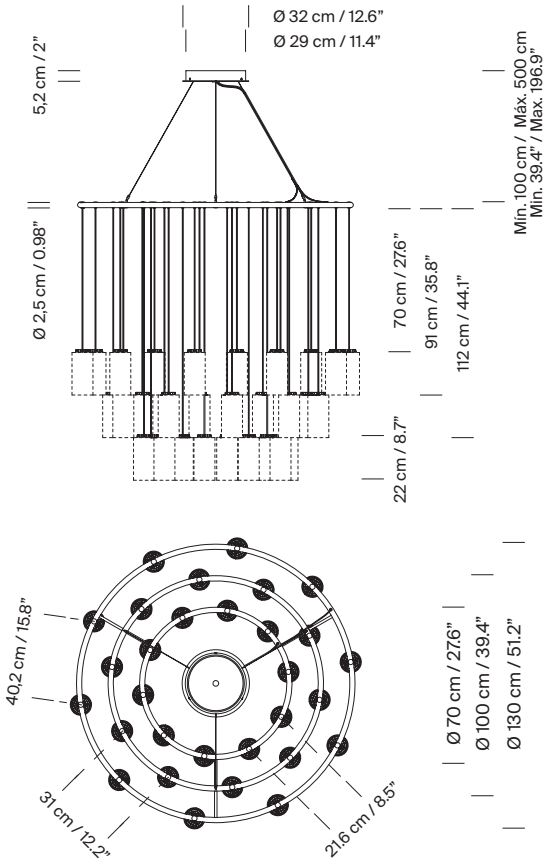

Direct cable to ceiling

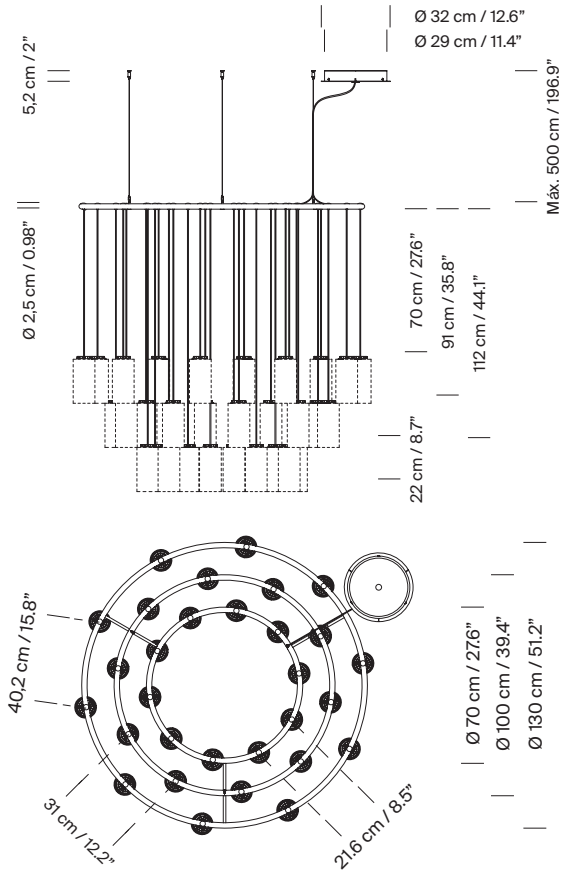

Codes / European Version

Lampshade	Dimming	Code
White porcelain	1-10V	CIHPB01
	DALI	CIHPB01D
White Pana porcelain	1-10V	CIHPB04
	DALI	CIHPB04D
Vidrio blanco opal	1-10V	CIHPB02
	DALI	CIHPB02D
Brass	1-10V	CIHPB03
	DALI	CIHPB03D

Codes / American Version

Lampshade	Dimming	Code
White porcelain	1-10V	CIHPB01UL
White Pana porcelain	1-10V	CIHPB04UL
White opal glass	1-10V	CIHPB02UL
Brass	1-10V	CIHPB03UL

Model D: Cirio Chandelier L

Direct cable to canopy

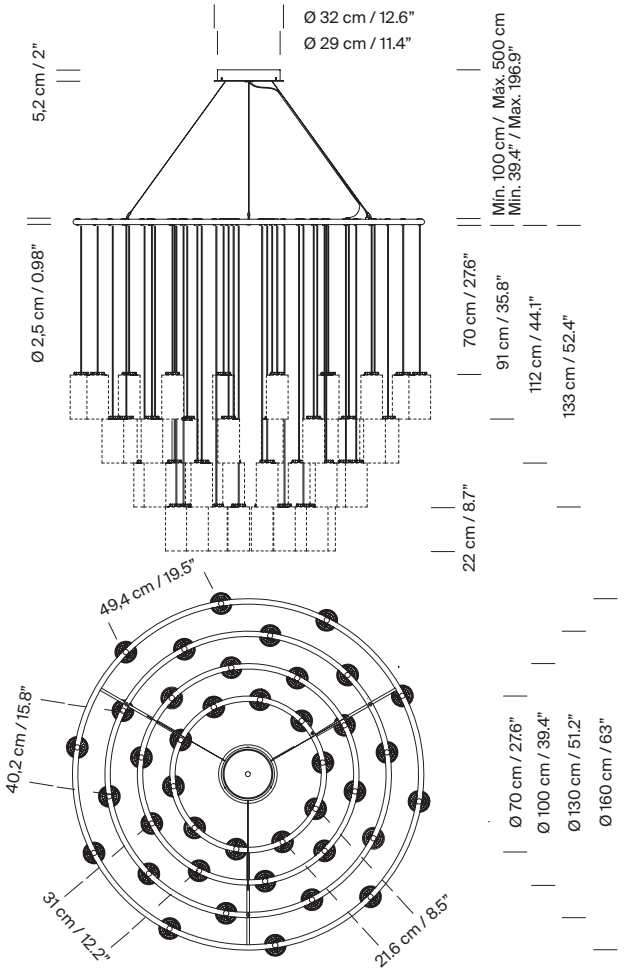

Direct cable to ceiling

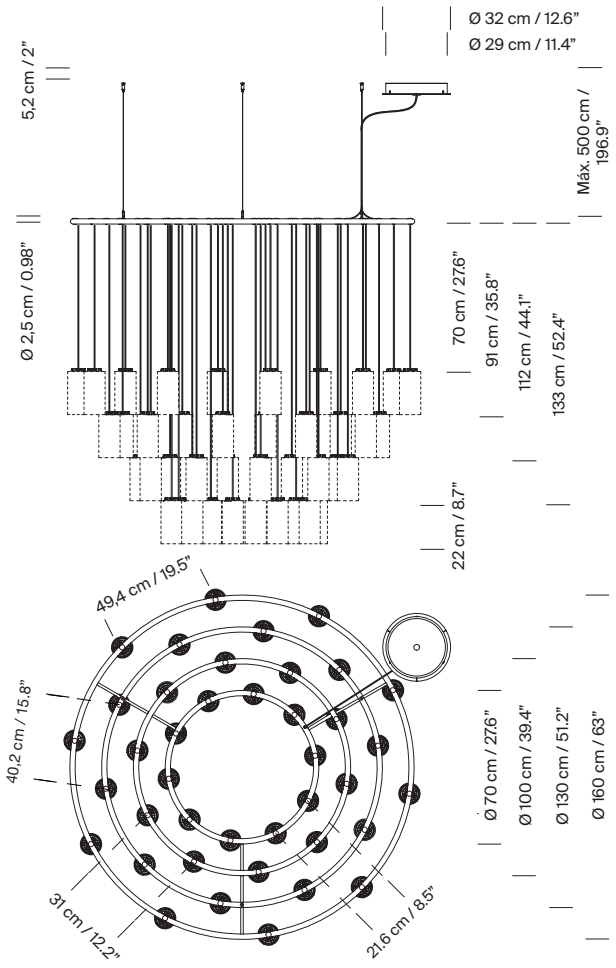

Codes / European Version

Lampshade	Dimming	Code
White porcelain	1-10V	CIHPC01
	DALI	CIHPC01D
White Pana porcelain	1-10V	CIHPC04
	DALI	CIHPC04D
Vidrio blanco opal	1-10V	CIHPC02
	DALI	CIHPC02D
Brass	1-10V	CIHPC03
	DALI	CIHPC03D

Codes / American Version

Lampshade	Dimming	Code
White porcelain	1-10V	CIHPC01UL
White Pana porcelain	1-10V	CIHPC04UL
White opal glass	1-10V	CIHPC02UL
Brass	1-10V	CIHPC03UL

Collection:
Pendant lamps

Cirio Simple

Cirio Múltiple

Cirio Cascada

Cirio Circular

Cirio Oval

Cirio Chandelier

Wall lamps

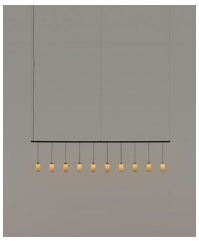
Cirio Lineal

Cirio Cuadrada

Cirio Pana

Cirio